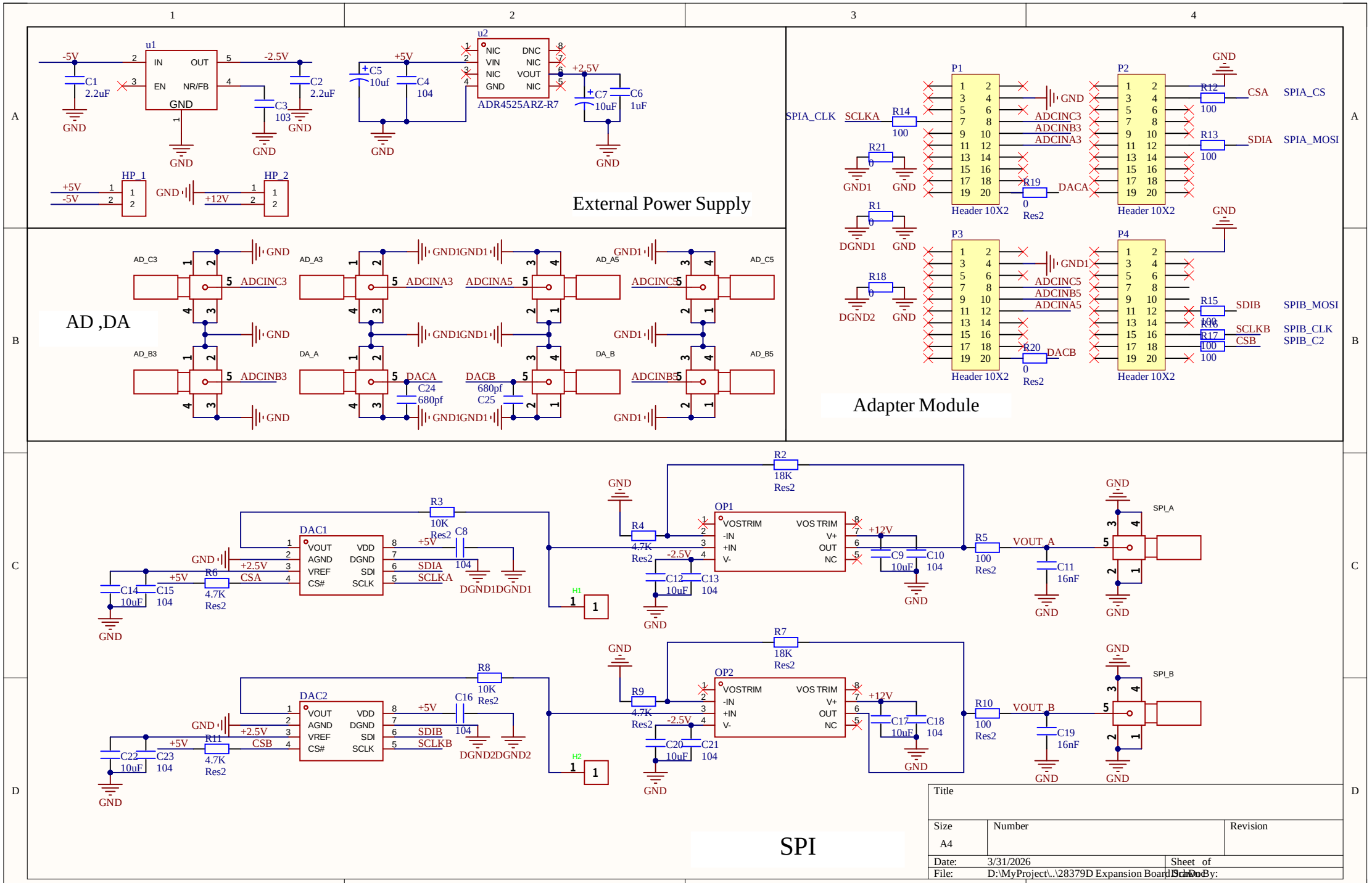
External Power Supply
u1
IN
OUT
EN
NR/FB
GND
-5V
-2.5V
C1 2.2uF
C2 2.2uF
C3 103
u2
NIC
VIN
VOUT
DNC
ADR4525ARZ-R7
+5V
+2.5V
C5 10uf
C4 104
C7 10uF
C6 1uF
HP_1
HP_2
+12V
AD ,DA
AD_C3
AD_A3
AD_A5
AD_C5
AD_B3
DA_A
DA_B
AD_B5
ADCINC3
ADCINA3
ADCINA5
ADCINC5
ADCINB3
DACA
DACB
ADCINB5
C24 680pf
C25 680pf
GND1
Adapter Module
P1
P2
P3
P4
Header 10X2
SPIA_CLK
SCLKA
R14 100
R21 0
R1 0
R18 0
R19 0 Res2
R20 0 Res2
ADCINC3
ADCINB3
ADCINA3
ADCINC5
ADCINB5
ADCINA5
DACA
DACB
R12 100
R13 100
R15 100
R16 100
R17 100
CSA
SDIA
SDIB
SCLKB
CSB
SPIA_CS
SPIA_MOSI
SPIB_MOSI
SPIB_CLK
SPIB_C2
GND1
DGND1
DGND2
SPI
DAC1
DAC2
VOUT
AGND
VREF
CS#
VDD
DGND
SDI
SCLK
R3 10K Res2
R8 10K Res2
C8 104
C16 104
R6 4.7K Res2
R11 4.7K Res2
C14 10uF
C15 104
C22 10uF
C23 104
+2.5V
CSA
CSB
SDIA
SDIB
SCLKA
SCLKB
DGND1
DGND2
H1
H2
OP1
OP2
VOSTRIM
-IN
+IN
V-
VOS TRIM
V+
OUT
NC
R2 18K Res2
R7 18K Res2
R4 4.7K Res2
R9 4.7K Res2
C12 10uF
C13 104
C20 10uF
C21 104
C9 10uF
C10 104
C17 10uF
C18 104
R5 100 Res2
R10 100 Res2
VOUT_A
VOUT_B
C11 16nF
C19 16nF
SPI_A
SPI_B
Title
Size
A4
Number
Revision
Date: 3/31/2026
Sheet of
File: D:\MyProject\..\28379D Expansion Board.SchDoc
Drawn By:

Board Stack Report